B. フレーム・電装部

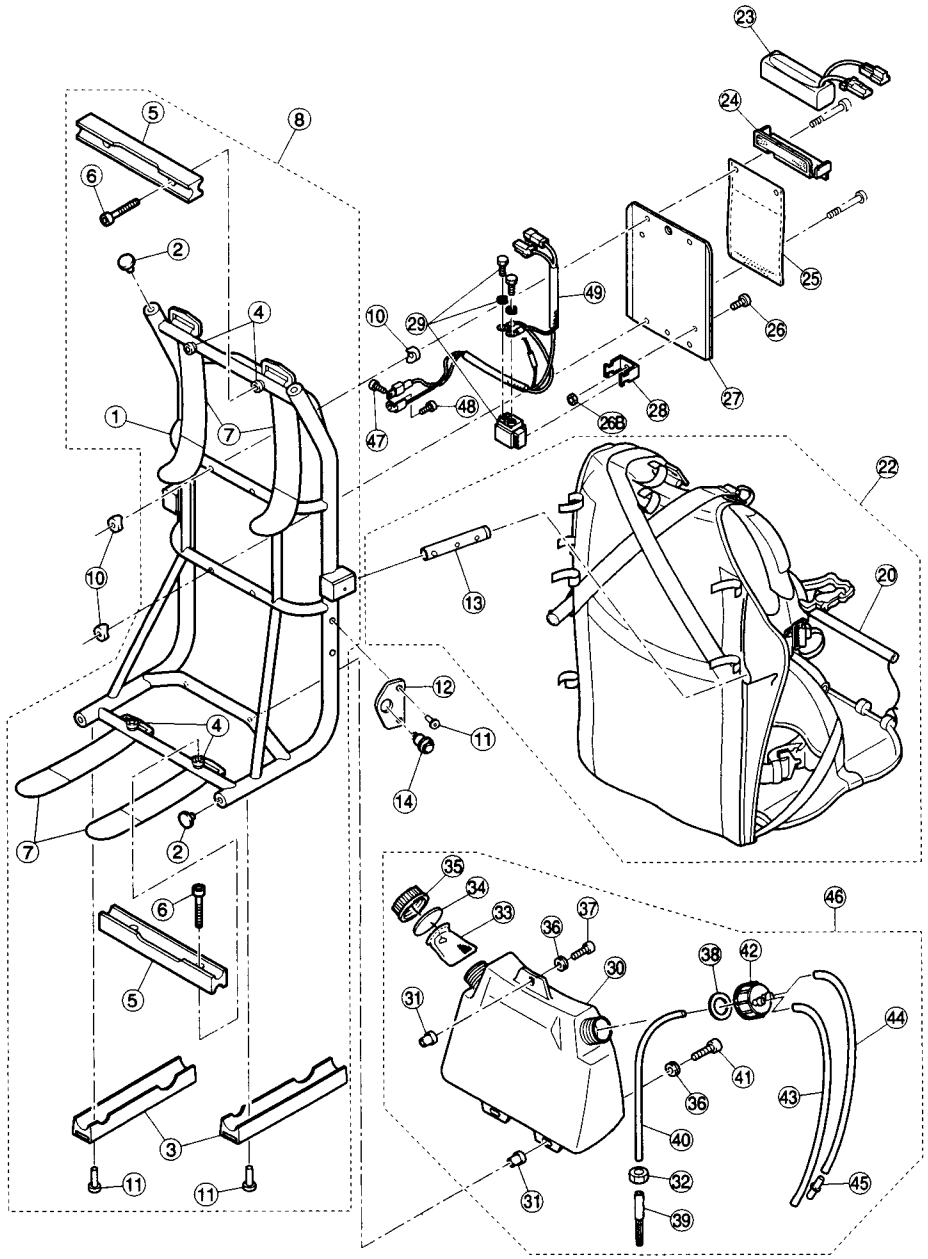

図番	部品ｺｰﾄﾞ	部品名		P/C	標準単価
1	3AFE22011	ﾒｲﾝﾌﾚｰﾑ ﾌﾟﾗｽ DK964U81200		1	75,000
2	3CAF20020	ﾊﾟｲﾌﾟｴﾝﾄﾞｷｬｯﾌﾟ D=20 105-11102		4	100
3	3AA021161	ｽｷｯﾄﾞﾗﾊﾞｰ L=230mm		2	2,000
4	3AF021011	ｸﾗﾀｲﾄ 5m/m		4	300
5	3AAE20101	ﾋﾟﾛｰﾌﾞﾛｯｸ		2	5,000
6	3CAF05450	M5 × 25 ｷｬｯﾌﾟﾎﾞﾙﾄ	(UC)	4	60
7	3AA022021	W=50mm ﾍﾞﾙｸﾛ		4	700
8	3AFA23021	ﾒｲﾝﾌﾚｰﾑ SET ﾌﾟﾗｽ		1	80,000
10	3AFE21011	ｸﾗﾝﾌﾟｴﾝｼﾞﾝﾏｳﾝﾄ S		8	750
11	3CAF21030	ﾘﾍﾞｯﾄ(ﾗｰｼﾞﾌﾗﾝｼﾞ)D=4.2 TA-53LF		14	30
12	3AA021211	ﾒｲﾝｽｲｯﾁﾌﾟﾚｰﾄﾃﾞﾙﾀ (ﾒｲﾝｽｲｯﾁﾏｳﾝﾄ)		1	3,000
13	3AAE20031	ｻｲﾄﾞ ﾊﾟｲﾌﾟ φ 20 ASSY		2	3,000
14	3AFB21011	ﾒｲﾝｽｲｯﾁ ﾌﾟﾗｽ		1	1,000
20	3AAA12051	ﾌｯﾄﾚｽﾄ φ 19 L=280 ASSY		1	2,500
22	3AAA12031	ﾊｰﾈｽASSY		1	70,000
23	3AA060031	Nicd ﾊﾞｯﾃﾘｰ 12-1900SCR		1	15,000
24	3AFA21035	ﾊﾞｯﾃﾘｰ ﾎﾙﾀﾞｰ		1	2,000
25	3AF021215	ﾊﾞｯﾃﾘｰ ｶﾊﾞｰ		1	500
26	**3CAF06365**	**M6 × 20ｷｬｯﾌﾟ (UC)**		1	30
26B	3CAF06130	M6 Uﾅｯﾄ	(UC)	1	120
27	3AFE21065	ﾘﾚｰﾌﾟﾚｰﾄ (ﾏｸﾞﾈｯﾄﾛｰﾀｰｶﾊﾞｰ)		1	4,000
28	3AAE20051	ｽﾀｰﾀｰﾘﾚｰ ﾏｳﾝﾄ (ﾘﾚｰﾏｳﾝﾄﾌﾞﾗｹｯﾄ)		1	400
29	3AAE20061	ｽﾀｰﾀｰﾘﾚｰ MS5E-501 62F		1	6,500
30	3AAE20071	燃料ﾀﾝｸ		1	4,000
31	3AF021011	ｸﾗﾀｲﾄ 5m/m		3	300
32	3CAF10110	ﾅｯﾄ M10用 燃料ﾌｨﾙﾀｰｳｪｲﾄ		1	30
33	3AA021111	ﾀﾝｸ口元ﾌｨﾙﾀｰ		1	1,000
34	3AA021121	ﾀﾝｸｷｬｯﾌﾟ用ﾊﾟｯｷﾝ	(ﾒｸﾗ)	1	100
35	3AAE20091	ﾀﾝｸ用 ｷｬｯﾌﾟ	(ﾒｸﾗ)	1	300
36	3CAF06050	ﾜｯｼｬｰ 6-16	(ｺﾞﾑ付座金)	3	100
37	3CAF05450	M5 × 25 ｷｬｯﾌﾟﾎﾞﾙﾄ	(UC)	1	60
38	3AA021141	ﾀﾝｸｷｬｯﾌﾟ用 ﾊﾟｯｷﾝ	(ﾉｽﾞﾙ付)	1	100
39	3AAC61041	燃料ﾌｨﾙﾀｰ GT		1	1,000
40	3AF031013	燃料ﾁｭｰﾌﾞ 4 × 7 L= 0.3		1	500
41	3CAF05450	M5 × 25 ｷｬｯﾌﾟﾎﾞﾙﾄ	(UC)	2	60
42	3AAE20081	ﾀﾝｸ用ｷｬﾂﾌﾟ	(ﾉｽﾞﾙ付)	1	500
43	3AF031013	燃料ﾁｭｰﾌﾞ 4 × 7 L= 0.5		1	500
44	3AF031013	燃料ﾁｭｰﾌﾞ 4 × 7 L= 0.4		1	500
45	3AAE21151	ｴｱｰﾎｰｽﾆｯﾌﾟﾙ		1	150
46	3AFA32021	燃料ﾀﾝｸ SET ﾌﾟﾗｽ		1	9,000
47	**3CAF05425**	**M5 × 8W付(＋)**	(ｸﾛﾒｲﾄ)	1	30
48	**3CAF06345**	M6 × 18 ｷｬｯﾌﾟﾎﾞﾙﾄ	(UC)	1	60
49	3AFB23013	ｽﾀｰﾀｰ配線 Assy ﾌﾟﾗｽ		1	9,000